FOOD PE

TECHNICAL DATA

HIGH SPEED 2,5 m/s

HIGH SAFETIES

SELF-REPAIRING

OIL FREE

WATER DRAIN

WASHABLE

GRAVITY TECHNOLOGY

MAXIMUM DIMENSIONS	**W** 4500 mm x **H** 3800 mm
SPEED	**Max opening speed** up to 2 m/s
	Closing speed 0,6 m/s
CYCLES TEST	1.000.000
WIND RESISTANCE	Class 0
STRUCTURE	Not self-supporting
FRAME	**Standard** Polyethylene HD 1.000.000
MOTOR COVER	Stainless Steel
CURTAIN	**Standard** PVC curtain 1300 gr/m², 6 W/m²K
	Optional • Translucent 35/40% • FDA (white) • Antistatic
SLIDING SYSTEM	Patented sliding system with high density Polyzene self-lubricant equipped of sliding zipper directly on curtain
CONTROL PANEL	**Standard** PVC box IP65 (300 x 400 x 150 mm)
	Optional • Stainless Steel • Powder coated steel box IP54 (300 x 500 x 150 mm)
	Inverter system 50/60 Hz with absolute encoder
	Power supply 1-ph, 230V max 16A
	Power supply 3-ph, 400V max 10A
	Power supply 3-ph, 230V max 16A
	Start/ Stop button
	2 free contacts (door open/closed/alert)
	Automatic/ Manual Interlocking between 2 doors
	IP rating for motor and control panel IP54
WIRING	Plug and Play system IP65
SAFETIES	**Standard** • Photocells set IP65 • Anti-jam sensor reverse
	Optional • WiFi safety edge IP65
EMERGENCY OPENING	**Standard** Hand crank
	Optional • Chain system • UPS battery
ADVISING OPERATIVE TEMPERATURE	Operating till positive temperature (> 0°C) Not apt to be installed in negative/positive temperature

FOOD PE is a self-repairing roll up door studied to environments, where hygiene is the most important issue. Its Polyethylene frame is designed to be sanitized in all its parts, without removal or disassembly of any profiles or covers with related problems in assembling again all screws and external elements. Columns come out from a Polyethylene monolithic section, where the zippers on the curtain run inside.
The specifically designed zip guide system allows the curtain to exit the guides in the event of impact and reinsert in one cycle.

EN13241 CERTIFICATION

STANDARD	RIF.	TEST ACC.	RESULTS
WATER PERMEABILITY	EN 12425	EN 12489	Class 1
WIND LOAD	EN 12424	EN 12444	Class 0
AIR PERMEABILITY	EN 12426	EN 12427	Class 0
SAFE OPENINGS	EN 12453	EN 12445	✓
MECHANICAL RESISTANCE	EN 12604	EN 12605	✓
UNINTENDED MOVEMENTS	EN 12604	EN 12605	✓
THERMAL TRANSMITTANCE	EN 12428	EN 12428	6,02 W/m²K
PERFORMANCE (CYCLES)	EN 12604	EN 12605	1.000.000

Values can change depending on door dimensions

ADVANTAGES

- Rapid
- Sealing
- Noiseless
- No rigid elements inside the curtain for 100% safety
- Plug & play (easy to install)
- Low maintenance
- Energy savings
- Sanitized in all parts
- Easily washable
- Hygienic

SLIDING SYSTEM / SELF-REPAIRING

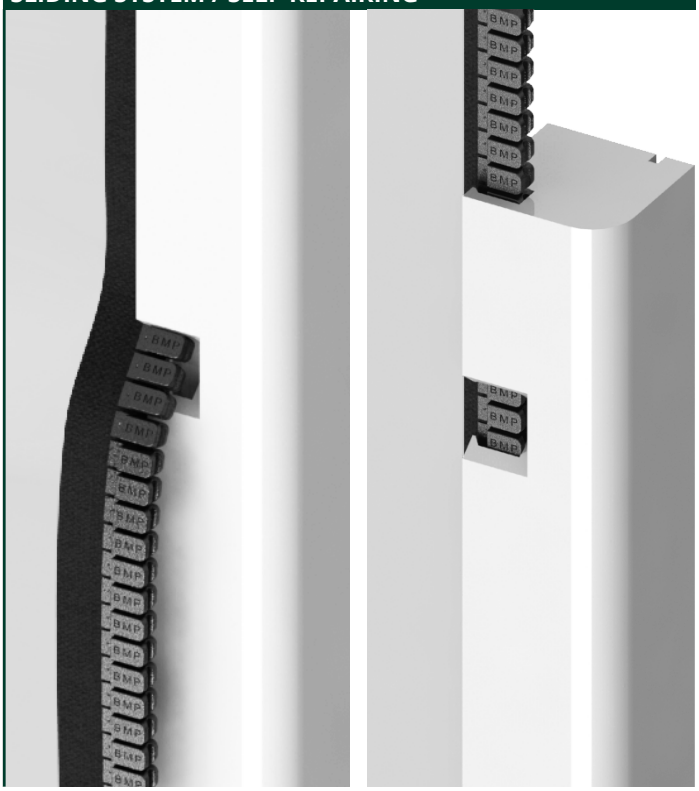

APPLICATION

Agriculture / Food industry

DOOR SPACE REQUIREMENTS

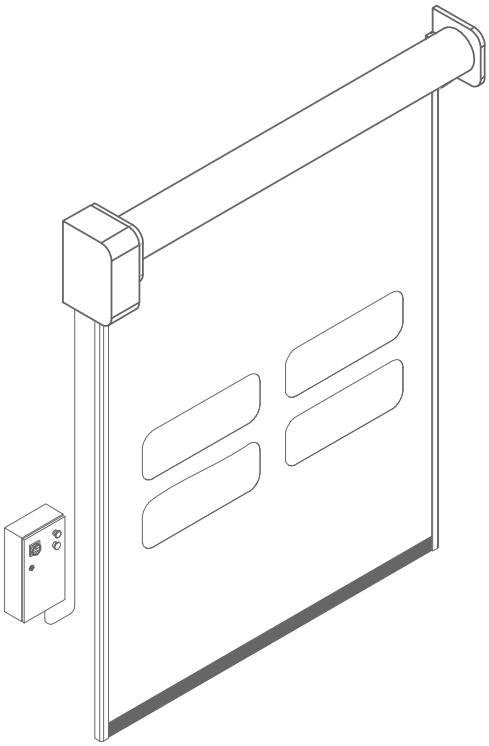

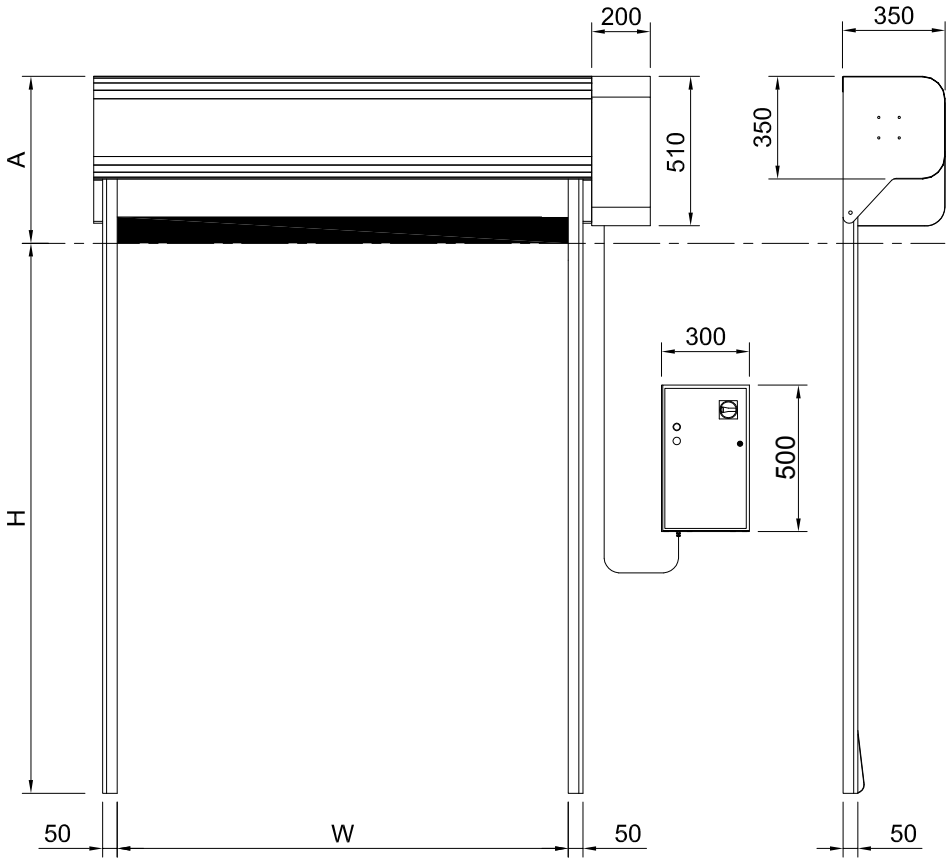

A 450 / 550

FIXING DETAILS

PVC CHARACTERISTICS

STANDARD PVC

Composition and tests

EXTERNAL SIDE			
Material	*Finishing*	*Color*	*Thick*
PVC	Opaque	12 standard	0,7 mm
FABRIC			
Material	*N. tarps*	*Title*	*EN 2286-2*
PES	1	1100Dtex 12x12	900 g/m²
INTERNAL SIDE			
Material	*Finishing*	*Color*	*Thick*
PVC	Rough	12 standard	0,2 mm

COLD RESISTANCE
ISO 4675/90
-50°C ±5

HYDROLYSIS TEST
75°C 95% humidity
none variation

GAS OIL TEST
ISO 1421
none variation

MARINE WATER TEST
(ISO 1421)
none variation

OZONE TEST
ISO 3011
none crack

T. STORAGE
(°C)
-30 +65

FLAME TEST
(ISO 3795)
< 100 mm/min

PERFORATION
RINA 3.A1.2.7
(N) > 100

EXERCISE 7 days -70°C
ISO 6065
none variation

Characteristics

THICK
ISO 2286/3
(mm) 0,9±0,1

WEIGHT
ISO 2286/2
(kg/m2) 0,90±0,1

LOAD BREAK
ISO 1421
6000 N/50mm

WARP EXTENSION
ISO 1421
4300 N/50mm

TEXTURE EXTENSION
ISO 1421
4000 N/50mm

WARP BREAK
dIN 53 363
(N) > 600

TEXTURE BREAK
dIN 53 363
(N) > 530

ADHESION
dIN EN ISO 2411
130 N/50mm

EEC CONFORMITY
-
Yes

SPECIFIC USE
industry, refrigerators, car washes, supermarkets, warehouses

ASSOCIATION
-

Colors

Insulated available Antistatic available

INSULATED PVC

Composition and tests

EXTERNAL SIDE			
Material	*Finishing*	*Color*	*Thick*
PVC	Straight	4 standard	0,5 mm
FABRIC			
Material	*N. tarps*	*Title*	*EN 2286-2*
PES	1	1100Dtex 12x12	1350 g/m²
INTERNAL SIDE			
Material	*Finishing*	*Color*	*Thick*
PVC	Sponge	4 standard	7 mm

COLD RESISTANCE
ISO 4675/90
-10°C ±5

HYDROLYSIS TEST
75°C 95% humidity
none variation

GAS OIL TEST
ISO 1421
none variation

MARINE WATER TEST
(ISO 1421)
none variation

OZONE TEST
ISO 3011
none crack

T. STORAGE
(°C)
-30 +65

FLAME TEST
ISO 3795
cl 2, NFPA 701 test 2

PERFORATION
RINA 3.A1.2.7
(N) > 100

EXERCISE 7 days -70°C
ISO 6065
none variation

Characteristics

THICK
ISO 2286/3
(mm) 7,0±0,1

WEIGHT
ISO 2286/2
(kg/m2) 1,7±0,1

LOAD BREAK
ISO 1421
6000 N/50mm

WARP EXTENSION
ISO 1421/V1
3000 N/50mm

TEXTURE EXTENSION
ISO 1421/V1
2800 N/50mm

WARP BREAK
dIN 53 363
300 N

TEXTURE BREAK
dIN 53 363
300 N

ADHESION
PA 09.03 (internal)
15 N/cm

THERMAL CONDUCTIVITY
-
0,03782 W.m⁻¹

ISOLATION INDEX
-
Rw= 17,5 dB

EMPLOYMENT
industry, refrigerators, car washes, supermarkets, warehouses

ASSOCIATION
-

Colors

FDA CERTIFICATED PVC

Food Drug Administration

TECNICAL DATA

Composition and tests

TOP FACE COATING			
Material	*Finish*	*Color*	*Thickness*
PUR	Opaque	white	0,6 mm
FABRIC			
Material	*N. tarps*	*Title*	*EN 2286-2*
PET	1	2200 Dtex 12x12	1500 g/m²
UNDERSIDE COATING			
Material	*Finish*	*Color*	*Thickness*
PUR	Plain	white	0,6 mm

COLD RESISTANCE
ISO 4675/90
-30°C ±5

TROPICAL TEST
75°C 95% humidity
none variation

DIESEL FUEL TEST
ISO 1421
none variation

SEA WATER TEST
ISO 1421
none variation

OZONE TEST
ISO 3011
none crack

T. STORAGE
(°C)
-30 +65

ABRASION
ISO 5470/80, 5N C517 400 cicles
(mg) 1

PUNCTURE
RINA 3.A1.2.7
(N) > 125

AGEING 7 days -70°C
ISO 6065
none variation

Characteristics

THICKNESS
ISO 2286/3
(mm) 1,20±0,1

WEIGHT
ISO 2286/2
(kg/m2) 1,30±0,1

TENSILE STRENGHT WARP
ISO 1421
6000 N / 50mm

ELONGATION YARN
ISO 1421
[%] > 14

ELONGATION WEFT
ISO 1421
[%] > 20

TEAR RESISTANCE WARP
dIN 53 363
(N) > 250

TEAR RESISTANCE WEFT
dIN 53 363
(N) > 220

PEELING TEST
dIN EN ISO 2411
130 N/50mm

FDA COMPLIANCE CEE
Yes

SPECIFIC USE
cleanrooms, clinical, hospital

ASSOCIATION
DynamicRoll

Disclaimer

The information contained in this document describes the features of the BMP EUROPE product as tested in a laboratory, other indications excepted, environment at a temperature of +23 degrees c• at 50% relative humidity. It does not necessarily reflect the conditions of industrial use and it does not guarantee the product to be suitable for certain applications. The client remains liable for the proper selection and correct use of the BMP EUROPE product. BMP EUROPE cannot be held responsible should damages arise from the use of its products. Necessary alterations to this data can be made without prior notice.

CRISTAL CHARACTERISTICS

PVC SUPERCLEAR

WINDOWS - *CRISTAL*
TECHNICAL DATA

Article : SUPERCLEAR 1.2 mm FR

Technical Specifications	Standards	Unit	Values
Thickness	-	mm.	1.2
PVC total weight	-	g/m2	1200
Ligth transmission	JIS K - 7361	%	97.3
Tensile strength *Lenghtwise MD*	JIS K - 6732	N	26.1
Tensile strength *Crosswise TD*	JIS K - 6732	N	24.3
Tear strength *Lenghtwise MD*	JIS K - 6732	N	63.4
Tear strength *Crosswise TD*	JIS K - 6732	N	63.9
Elongation *Lenghtwise MD*	JIS K - 6732	%	377
Elongation *Crosswise TD*	JIS K - 6732	%	378
Cold crack resistance	JIS K - 6772	°C	-45

OPTIONAL ACCESSORIES

RADAR

OPENING POINTING RADAR
TOF/SPOT
for internal use only

INFRARED RADAR
with cross-movement
adjustment

INFRARED RADAR
motion and presence
(pedestrian/forklift) radar

TRAFFIC LIGHTS

GREEN FIXED STANDARD
traffic light

RED FIXED STANDARD
traffic light

LED TRAFFIC LIGHT
with countdown

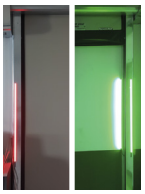

LED TRAFFIC LIGHT BARRIERS
(connection card included)

BUTTONS

OPENING GREEN BUTTON
with box

OPENING BLACK BUTTON
with box

FREEZE STOP BUTTON
with box

NO TOUCH BUTTON

TRAFFIC LIGHT
BUTTON

WIND
GAUGE

KEY
SELECTOR

REMOTE
CONTROL

BOLLARD
B-PROTECT

PULL CORD
SWITCH

MAGNETIC LOOP
DETECTOR

Quality products since 1997

BMP EUROPE HIGH SPEED DOORS
Strada della Freisa 1 - Villanova d'Asti 14019 (AT)
+39 0141 948843
www.bmpdoors.com - info@bmpeurope.eu

12/2021